FORM MS-3823-41 REV.
REPLACES FORM MS-3823-58

Illustrated Parts List

MODEL SERIES

"6B"—"6B-F"—"6B-FB"—"6B-R6"

•

HOW TO FIND THE CORRECT NUMBER OF THE PART YOU NEED

These instructions are to be followed when using a Parts List to determine the correct part for an engine.

• • • • • • •

A. Refer to Engine Model, Type and Serial Number that is stamped on the blower housing or name plate of engine. Then use the Illustrated Parts List covering this Model Series.

B. Refer to Illustrated Parts section and compare the old part with illustration. The number on the illustration is the Reference Number. Assemblies include all parts shown in frames. All parts shown in assembly frames on which individual reference numbers are given can be purchased separately.

C. After the Reference Number has been identified, refer to the Numerical Parts List, where Master Part Numbers are listed. THE MASTER PART IS USED ON ALL TYPE NUMBERS EXCEPT THOSE TYPE NUMBERS UNDER "NOTE".

D. If a "Note" appears below the Master Part Number, this means that this part differs from the Master Part for certain types. If the Type Number is listed under "Note", order the part referred to.

E. If the Engine Type Number does not appear after any part number listed under "Note", use the Master Part Number.

PRINTED IN U.S.A. AT B & S

ORIGINAL BRIGGS & STRATTON SERVICE PARTS ®

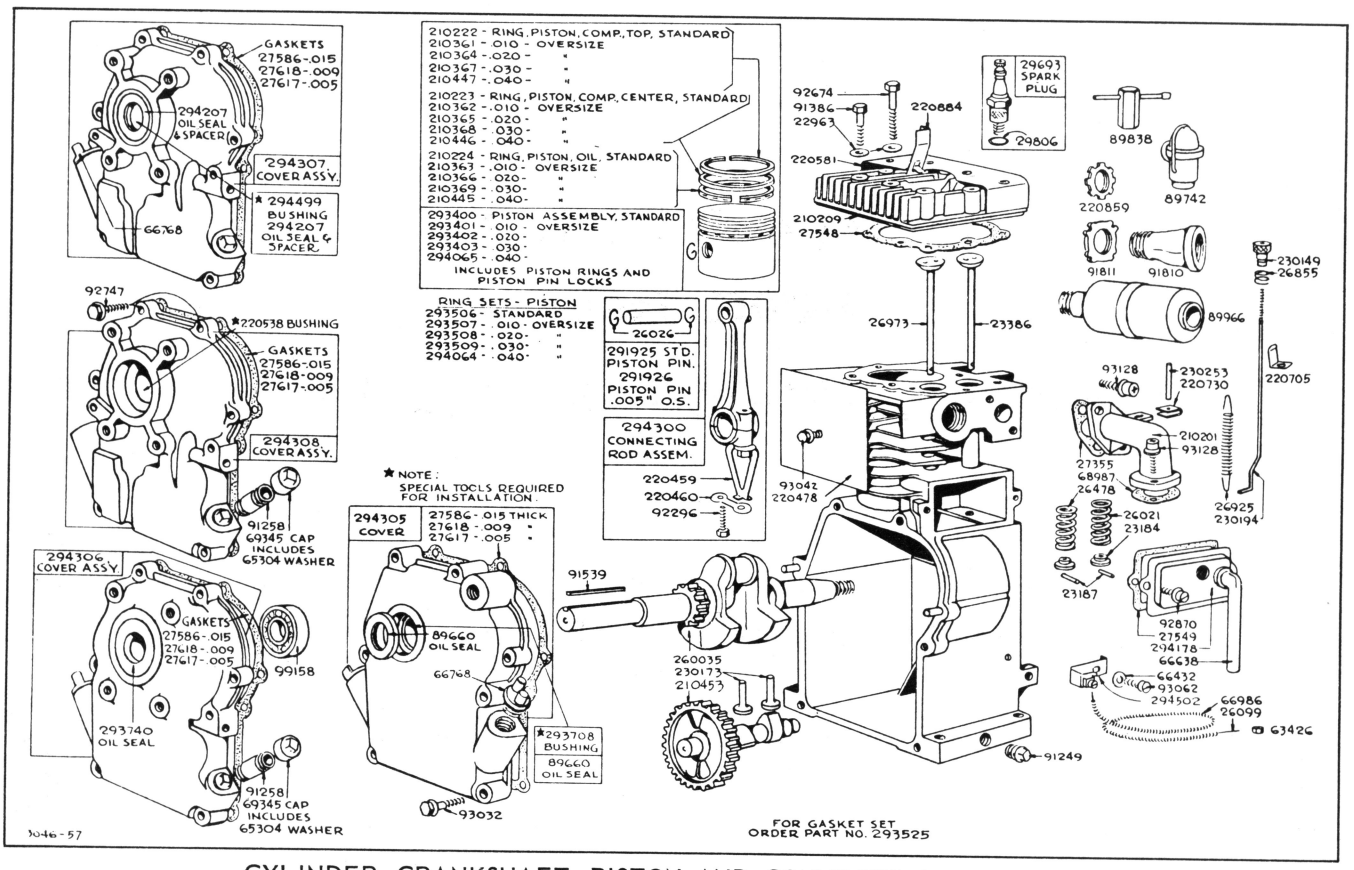

CYLINDER, CRANKSHAFT, PISTON AND CONNECTING ROD PARTS

Assemblies include all parts shown in frames.

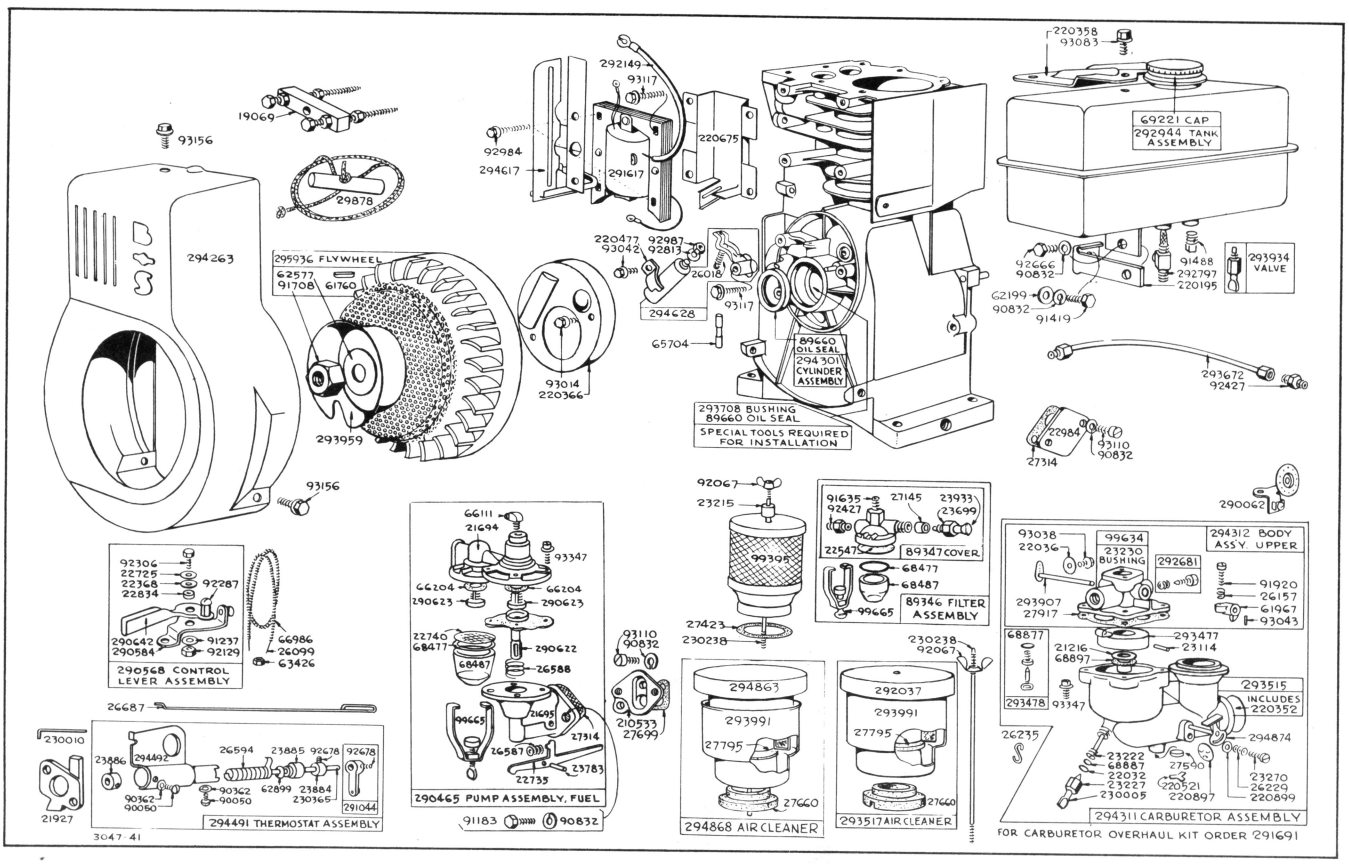

FUEL SYSTEM, MAGNETO AND BLOWER HOUSING PARTS

Assemblies include all parts shown in frames.

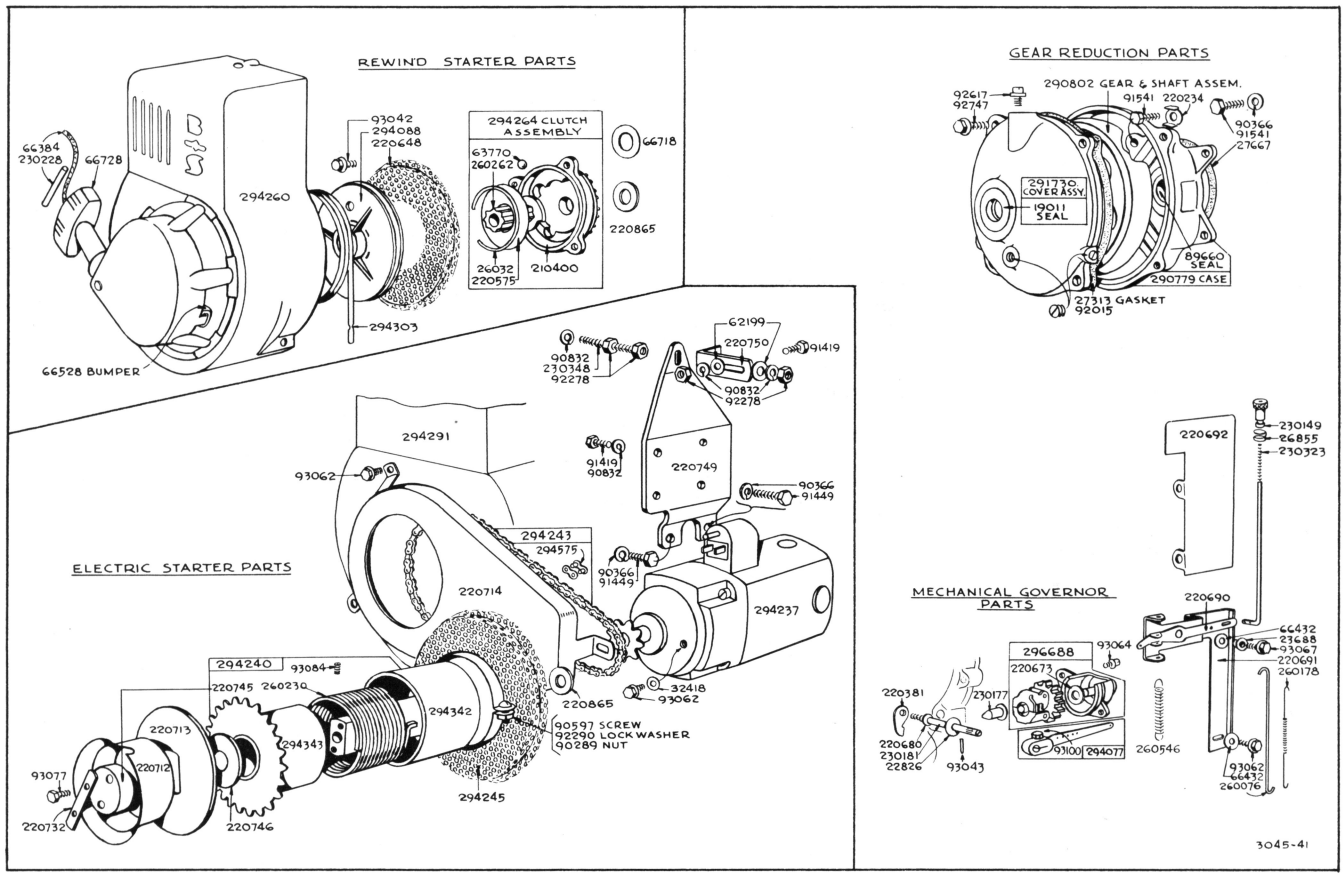

GEAR REDUCTION, MECHANICAL GOVERNOR AND STARTER PARTS
Assemblies include all parts shown in frames.

NUMERICAL PARTS LIST

PART NO.	DESCRIPTION
19011	Seal – Oil
19069	Puller – Flywheel (Optional Accessory)
21216	Venturi – Carburetor
21694	Head – Fuel Pump
21695	Body – Fuel Pump
21927	Spacer – Carburetor Elbow
Note:	Used only on engines with automatic choke.
†22032	Washer – Needle Valve Packing
22036	Valve – Throttle
22368	Washer – Control Lever
22547	Screen – Fuel Filter
22725	Washer – Control Lever
22735	Lever – Fuel Pump
22826	Washer – Spacer
22834	Washer – Spacer
22963	Washer – Cylinder Head
†23114	Pin – Float Hinge
23184	Retainer – Valve Spring
Note:	**292259** Rotocap – Exhaust Valve Used on type Nos. 902085, 902146, 902154, 902544, 902545, 902548, 902551, 902555, 902556, 902558, 902561, 902571, 902574, 902575, 902586, 902596, 903538, 903539, 903547, 903553, 903558, 903559.
23187	Pin – Valve Spring Retainer
Note:	**230126** Pin – Exhaust Valve Rotocap Retainer **230127** Retainer – Exhaust Valve Rotocap Used on type Nos. 902085, 902146, 902154, 902544, 902545, 902548, 902551, 902555, 902556, 902558, 902561, 902571, 902574, 902575, 902586, 902596, 903538, 903539, 903547, 903553, 903558, 903559.
23215	Spacer – Flame Arrestor
†23222	Nozzle – Carburetor
†23227	Nut – Needle Valve Packing
23230	Bushing – Throttle Shaft
23270	Screw – Choke Lever
23386	Valve – Intake
Note:	**26973** Valve Used on type Nos. 902085, 902146, 902154, 902544, 902545, 902558, 902561, 902571, 902586, 903538, 903539, 903553, 903558.
23688	Bushing – Governor Lever
23699	Nut – Fuel Shut-off Lever
23783	Pin – Fuel Pump Lever
23884	Stop – Thermostat Shaft
23885	Support – Thermostat Shaft (Inner)
23886	Support – Thermostat Shaft (Outer)
23933	Lever – Fuel Shut-off
26018	Spring – Breaker Arm
26021	Spring – Intake Valve
26026	Lock – Piston Pin
26032	Spring – Clutch Retainer
26099	Wire – Control, 54" long
Note:	If longer wire is needed, specify length by inches; if shorter wire is needed order No. 26099 and cut to required length.
†26157	Spring – Throttle Adjustment
26229	Spring – Choke Lever
26235	Link – Governor
26478	Spring – Exhaust Valve
Note:	**26826** Spring – Exhaust Valve Used on type Nos. 902085, 902146, 902154, 902544, 902545, 902548, 902551, 902555, 902556, 902558, 902561, 902571, 902574, 902575, 902586, 902596, 903538, 903539, 903547, 903553, 903558, 903559.
26587	Spring – Fuel Pump Lever

†Included in Carburetor Overhaul Kit – Part No. 291691.

PART NO.	DESCRIPTION
26588	Spring – Fuel Pump Diaphragm
26594	Thermostat
26687	Link – Choke
26855	Spring – Control Rod
26925	Spring – Governor
26973	Valve – Exhaust
Note:	**260075** Valve – Exhaust Used on type Nos. 902085, 902146, 902154, 902544, 902545, 902551, 902558, 902561, 902571, 902586, 902596, 903538, 903539, 903553, 903558, 903559.
27145	Packing – Fuel Shut-off Lever
27313	Gasket – Gear Case Cover
27314	Gasket – Fuel Pump Mounting
***27355**	Gasket – Intake Elbow Mounting
Note:	**27384** Gasket – Intake Elbow Used on type Nos. 903022, 903535, 903536, 903542, 903545, 903551, 903553.
27423	Gasket – Flame Arrestor Mounting
***27548**	Gasket – Cylinder Head
Note:	Two No. 27548 Gaskets are used on type Nos. 902106, 902169, 902546, 902549, 902551, 902552, 902555, 902574, 902587, 902857.
***27549**	Gasket – Valve Cover
***27586**	Gasket – Crankcase – .015" Thick (Standard)
27590	Filter – Carburetor Drain
***27617**	Gasket – Crankcase – .005" Thick
***27618**	Gasket – Crankcase – .009" Thick
27660	Gasket – Air Cleaner Mounting
Note:	**27603** Gasket – Air Cleaner Mounting Used on type Nos. 903539, 903558. **27666** Gasket – Air Cleaner Used on type Nos. 902048, 902067, 902072, 902075, 902076, 902077, 902079, 902095, 902100, 902113, 902114, 902140, 902161, 902163, 902554, 902593, 902595, 902855, 902859, 902861, 902864.
27667	Gasket – Gear Case
27699	Gasket – Spacer
†27917	Gasket – Carburetor Body
27795	Gasket – Air Cleaner
Note:	**27402** Gasket – Air Cleaner (Cup type) Used on air cleaners without attached stud.
29693	Plug – Spark (with Gasket)
Note:	**292519** Plug – Spark (with Gasket) Used on type Nos. 902128, 902571, 903539, 903553, 903558. **293923** Plug – Spark (with Gasket) Used on type Nos. 902056, 902542, 903021, 903534, 903536, 903550.
29806	Gasket – Spark Plug
29878	Rope – Starter
32418	Washer – Chain Guard Mounting
61760	Key – Flywheel

† Included in Carburetor Overhaul Kit – Part No. 291691.

* Included in Gasket Set – Part No. 293525.

PART NO.	DESCRIPTION
61967	Stop – Throttle Lever
62199	Washer – Fuel Tank Bracket
62577	Washer – Flywheel
63426	Locknut – Control Wire Casing
63770	Ball – Clutch
65304	Gasket – Filler Cap
65704	Plunger – Breaker Point
66111	Connector – Fuel Pipe
66204	Gasket – Fuel Pump Valve
66384	Rope – Starter
66432	Washer – Governor and Control Wire Casing Bracket Mounting
66528	Bumper – Starter Pulley
66638	Tube – Breather
Note:	**230346** Tube – Breather Used on type Nos. 902048, 902067, 902072, 902075, 902076, 902077, 902079, 902095, 902100, 902113, 902114, 902140, 902161, 902163, 902554, 902593, 902595, 902855, 902859, 902861, 902864. Uses: **220754** Support – Tube **66578** Grommet (In Valve Cover)
66718	Washer – Starter Clutch, Thrust (Used with square shaft ratchet)
66728	Grip – Starter Rope
66768	Plug – Oil Filler
66986	Casing – Control Wire – 48" Long
Note:	If a longer casing is needed, specify length in inches; if a shorter casing is needed order No. 66986 and cut to required length.
68477	Gasket – Fuel Filter Bowl
68487	Bowl – Fuel Filter
68877	Gasket – Fuel Inlet Valve Seat
†68887	Packing – Needle Valve
68897	Gasket – Carburetor Venturi
***†68987**	Gasket – Carburetor Mounting
69221	Cap – Fuel Tank
Note:	**69961** Cap – Fuel Tank Used on type No. 902080. **293026** Cap – Fuel Tank Used on type No. 903553.
69345	Cap – Oil Filler
89346	Filter Assembly – Fuel
Note:	**99910** Filter Assembly – Fuel Used on type Nos. 902080, 902153. **294663** Filter Assembly – Fuel Used on type No. 903553.
89347	Cover Assembly – Fuel
Note:	**99909** Cover Assembly – Fuel Filter Used on type Nos. 902080, 902153. **294665** Cover Assembly – Fuel Filter Used on type No. 903553.
89660	Seal – Oil
89742	Shield – Spark Plug
Note:	**66538** Elbow – Spark Plug Used on type Nos. 902544, 903023. **291630** Shield – Spark Plug (With Stop Switch) Used on type Nos. 902154, 902569, 902572, 902577, 902856, 903024, 903527, 903530, 903531, 903532, 903533, 903535, 903537, 903538, 903541, 903541, 903548, 903551, 903552, 903554, 903555.
89838	Wrench – Spark Plug
89966	Muffler – Exhaust
Note:	**89945** Muffler – Exhaust Used on type Nos. 902825, 903022. **292054** Muffler – Exhaust Used on type Nos. 902024, 902027, 902034, 902052, 902061, 902062, 902063, 902065, 902067, 902070, 902075, 902076, 902078, 902096, 902104, 902119, 902124, 902140, 902144, 902533, 902538, 902595, 902849. **293449** Muffler – Exhaust Used on type No. 903553. **294441** Muffler – Exhaust Used on type Nos. 902022, 902029, 902033, 902039, 902041, 902042, 902050, 902051, 902055, 902057, 902059, 902060, 902061, 902062, 902064, 902066, 902079, 902080, 902084, 902086, 902087, 902089, 902092, 902093, 902094, 902095, 902098, 902103, 902105, 902110, 902111, 902112, 902118, 902123, 902125, 902133, 902139, 902146, 902155, 902156, 902157, 902162, 902172, 902538, 902553, 902556, 902561, 902582, 902586, 902823, 902850, 902861, 902864, 903023, 903538, 903552, 903558.
90050	Screw – Machine, Rd. Hd. – 6-32 x $\frac{1}{4}$"
90289	Nut – Square – 10-32
90362	Washer – Lock – No. 6 x $\frac{3}{64}$ x $\frac{1}{32}$"
90366	Washer – Lock – $\frac{5}{16}$ x $\frac{1}{8}$ x $\frac{5}{16}$"
90597	Screw – Machine, Rd. Hd. – 10-32 x $\frac{1}{2}$"
90832	Washer – Lock – $\frac{1}{4}$ x $\frac{3}{32}$ x $\frac{5}{64}$"
Note:	**92778** Washer – Lock – Shakeproof Used to mount blower housing on type Nos. 902128, 902571, 903539, 903553, 903558.
91183	Screw – Cap, Hex. Hd. – $\frac{1}{4}$-28 x $\frac{5}{8}$"
91237	Washer – Lock – $\frac{1}{3}$ x $\frac{3}{32}$ x $\frac{3}{64}$"
91249	Plug – Pipe, $\frac{1}{4}$" Std., Square Head
Note:	**93139** Plug – Oil Drain, Hex. Hd. Used on type Nos. 902055, 902089.
91258	Nipple – Oil Filler
91386	Screw – Cylinder Head (2" Long)
91419	Screw – Cap, Hex. Hd. – $\frac{1}{4}$-20 x $\frac{5}{8}$"
91449	Screw – Cap, Hex. Hd. – $\frac{5}{16}$-18 x 1$\frac{1}{8}$"
91488	Plug – Pipe, $\frac{1}{8}$" Standard, Sq. Hd.
Note:	**91249** Plug – Pipe, $\frac{1}{4}$", Sq. Hd. Used on type Nos. 902143, 902561, 902579, 902854, 903553.
91539	Key – $\frac{3}{16}$" Square
91541	Screw – Cap, Hex. Hd. – $\frac{5}{16}$-24 x $\frac{7}{8}$"
91635	Connector – Fuel Filter

PART NO.	DESCRIPTION
	(Used only on type Nos. 902143, 902561, 902579, 902854)
91708	Nut – Flywheel
91810	Elbow – Exhaust (45° Street)
Note:	**91812** Elbow – Exhaust (90° Street) Used on type Nos. 902021, 902055, 902085, 902113, 902134, 902135, 902146, 902167, 902537, 902564, 902821, 902822, 902830, 902847, 902858, 902859, 902866.
91811	Locknut – Exhaust Elbow
91920	Screw – Machine, Fill. Hd. – 8-32 x $\frac{5}{8}$"
92015	Plug – Oil Drain (Gear Cover)
Note:	**92961** Elbow – Street, $\frac{1}{8}$", 90° Used on type No. 902841.
92067	Nut – Wing
92129	Nut – Hex. – $\frac{1}{4}$-28
92278	Nut – Hex. – $\frac{1}{4}$-20
92287	Screw – Machine, Rd. Hd. – 10-32 x $\frac{1}{4}$"
92290	Washer – Lock – No. 10 x $\frac{1}{16}$ x $\frac{3}{64}$"
92296	Screw – Connecting Rod
92306	Screw – Cap, Hex. Hd. – $\frac{1}{4}$-28 x $\frac{5}{8}$"
92427	Connector – Tubing
Note:	**53029** Connector – Fuel Pipe Used on type Nos. 902080, 902153. **93013** Connector – Fuel Pipe Used on type No. 903553.
92617	Plug – Breather
92666	Screw – Cap, Hex. Hd. – $\frac{1}{4}$-20 x $\frac{1}{2}$"
Note:	**92636** Screw – Cap, Hex. Hd. – $\frac{1}{4}$-20 x 2" **230352** Spacer Used on type Nos. 902026, 902059, 902078, 902534, 902536, 902565, 902572, 903533, 903542, 903544, 903545, 903554.
92674	Screw – Cylinder Head ($2\frac{3}{8}$" Long)
92678	Screw – Set, Socket Head – 6-32 x $\frac{5}{16}$"
92747	Screw – Crankcase Cover and Gear Case Mounting Sem
92813	Washer – Lock – Shakeproof
92863	Screw – Self-Tapping, Hex. Hd. – $\frac{1}{4}$-28 x $\frac{5}{8}$"
92870	Screw – Breather Mounting Sem
92984	Screw – Armature Mounting Sem
92987	Nut – Condenser Terminal
93014	Screw – Dust Cover Mounting Sem
93032	Screw – Crankcase Cover Mounting Sem
93038	Screw – Throttle Valve Mounting Sem
93042	Screw – Rotating Screen, Condenser Clamp and Cylinder Shield Mounting Sem
93043	Pin – Throttle Stop and Governor Shaft
93062	Screw – Governor Control Bracket and Chain Guard Mounting Sem
93064	Screw – Governor Housing to Crankcase Cover Mounting Sem
93067	Screw – Governor Lever Mounting Sem
93077	Screw – Clamp Mounting
93083	Screw – Tank Mounting Sem
93084	Screw – Set, Socket Hd., Cup Point 10-32 x $\frac{1}{4}$"
93100	Screw – Governor Lever Mounting
93110	Screw – Fuel Pump Spacer and Hole Cover Mounting Sem
93117	Screw – Contact Finger Post and Coil Lead Mounting Sem
93128	Screw – Carburetor and Intake Elbow Mounting Sem
Note:	**93170** Screw – Carburetor and Intake Elbow Mounting **93028** Washer – Lock – Shakeproof Used on type Nos. 903022, 903535, 903536, 903542, 903545, 903551, 903553.
93156	Screw – Blower Housing Mounting Sem
Note:	**92666** Screw – Cap, Hex. Hd. – $\frac{1}{4}$-20 x $\frac{1}{2}$" **92778** Washer – Lock – Shakeproof Used on type Nos. 902128, 902571, 903539, 903553, 903558.
93347	Screw – Throttle Housing and Fuel Pump Head Mounting Sem
99158	Bearing – Ball
99395	Arrestor – Flame
99634	Body – Upper Carburetor
99665	Yoke – Fuel Filter
210201	Elbow – Intake
210209	Head – Cylinder
Note:	**210624** Head – Cylinder Used on type Nos. 902106, 902169, 902546, 902549, 902551, 902552, 902555, 902574, 902587, 902857. Uses: **220863** Washer – Spacer (Between tank bracket and one boss on cylinder head)
210222	Ring – Piston, Compression, Top – Standard
210223	Ring – Piston, Compression, Center – Standard
210224	Ring – Piston, Oil – Standard
210361	Ring – Piston, Compression, Top – .010" O.S.
210362	Ring – Piston, Compression, Center – .010" O.S.
210363	Ring – Piston, Oil – .010" O.S.
210364	Ring – Piston, Compression, Top – .020" O.S.
210365	Ring – Piston, Compression, Center – .020" O.S.
210366	Ring – Piston, Oil – .020" O.S.
210367	Ring – Piston, Compression, Top – .030" O.S.
210368	Ring – Piston, Compression, Center – .030" O.S.
210369	Ring – Piston, Oil – .030" O.S.
210400	Housing – Starter Clutch
210445	Ring – Piston, Oil – .040" O.S.
210446	Ring – Piston, Compression, Center – .040" O.S.
210447	Ring – Piston, Compression, Top – .040" O.S.
210453	Gear – Cam
210533	Spacer – Fuel Pump Mounting
220195	Bracket – Fuel Tank
Note:	**221011** Bracket – Fuel Tank Used on type No. 902859. Uses: **91419** Screw – Cap Hex. Hd. – $\frac{1}{4}$-20 x $\frac{5}{8}$" **90832** Washer – Lock To mount bracket to gear case.
220234	Lock – Gear Case Mounting Screw
220352	Plug – Welch
220358	Support – Fuel Tank
Note:	**220369** Support – Fuel Tank Used on type Nos. 902045, 902091, 902561, 902567, 902568, 902571, 902837, 902855, 903530, 903531, 903543, 903548, 903550, 903552. **220607** Support – Fuel Tank Used on type Nos. 902026, 902059, 902078, 902534, 902536, 902565, 902572, 903533, 903542, 903544, 903545, 903554. **220610** Support – Fuel Tank Used on type No. 902859. Uses: **220863** Washer Between support and cylinder head on (3) bosses. **220755** Support – Fuel Tank Used on type Nos. 902032, 902033, 902035, 902058, 902060, 902061, 902062, 902066, 902083, 902103, 902107, 902110, 902126, 902148, 902167, 902841, 903023.
220366	Cover – Breaker Point and Condenser
220381	Follower – Governor Crank
220459	Dipper – Connecting Rod
220460	Lock – Connecting Rod Screw
220477	Clamp – Condenser
220478	Shield – Cylinder
220521	Retainer – Carburetor Drain Filter
220538	Bushing – Crankcase Cover
Note:	Requires special tools for installation
220575	Washer – Clutch Retainer
220581	Cover – Cylinder Head
Note:	**220354** Cover – Cylinder Head Used on type Nos. 902106, 902146, 902169, 902546, 902549, 902551, 902552, 902555, 902574, 902587, 902857, 902859.
220648	Screen – Rewind Starter
220673	Washer – Thrust
220675	Shield – Coil
220680	Washer – Thrust
220690	Lever – Mechanical Governor
220691	Bracket – Mechanical Governor
Note:	**294476** Bracket – Mechanical Governor

PART NO.	DESCRIPTION
	Used on type Nos. 903022, 903530, 903535, 903536, 903537, 903538, 903542, 903545, 903548, 903551, 903553, 903554, 903555, 903556.
220692	Guide – Air
220698	Bracket – Control Casing
220705	Spring – Control Rod Friction
220712	Pulley – Rope Starter
220713	Washer – Pinion Guard
220714	Guard – Electric Starter Chain
220730	Clip – Control Rod
220732	Lock – Starter Pulley Screw
220745	Clamp – Starter Clutch
220746	Washer – Thrust
220749	Bracket – Starter Support
220750	Bracket – Fuel Tank
220859	Locknut – Muffler and Exhaust Elbow
220865	Washer – Spring (Used to lock starter clutch)
220884	Switch – Stop
Note:	**293739** Switch – Stop Used on type No. 903023.
220897	Valve – Choke
Note:	**22050** Valve – Choke (with hole) Used on earlier model engines; also on type Nos. 903558, 903559. Uses: **93038** Screw for mounting **22876** Valve – Choke (with hole) Used on type Nos. 903022, 903542, 903545, 903551, 903553. Uses: **93038** Screw for mounting.
220899	Washer – Choke Lever
230005	Valve – Needle
Note:	**292088** Valve – Needle Used on type Nos. 902106, 902169, 902546, 902549, 902551, 902552, 902555, 902574, 902587, 902857, 903539, 903553, 903558, 903559.
230010	Wrench – Socket Screw
230149	Nut – Control Rod
Note:	**21772** Nut – Control Rod Used on type No. 902110.
230173	Tappet – Valve
230177	Cup – Governor
230181	Shaft – Governor Lever
230194	Rod – Control
230228	Pin – Starter Grip
230238	Stud – Air Cleaner
Note:	**230361** Stud – Air Cleaner Used on type Nos. 902048, 902067, 902072, 902075, 902076, 902079, 902095, 902113, 902114, 902146, 902554, 902586, 903539, 903558.
230253	Stop – Control Rod
230323	Rod – Control (Mechanical Governor)
Note:	**230367** Rod – Control (Mechanical Governor) Used on type Nos. 903022, 903535, 903536, 903542, 903545, 903551, 903553.
230348	Stud – Chain Tension Adjusting
230365	Shaft – Thermostat
260035	Crankshaft
Note:	**26945** Crankshaft Used on type Nos. 902030, 902121, 902153.
	260036 Crankshaft Used on type Nos. 902510, 902527, 902528, 902530, 902532, 902533, 902536, 902540, 902543, 902545, 902551, 902552, 902556, 902557, 902558, 902563, 902569, 902585, 902588, 903510, 903513, 903528, 903540.
	260037 Crankshaft Used on type Nos. 902521, 902534, 902535, 902537, 902538, 902541, 902542, 902546, 902547, 902550, 902559, 902562, 902564, 902568, 902570, 902577, 902578, 902579, 902591, 902593, 902594, 902596, 903521, 903527.
	260039 Crankshaft Used on type Nos. 902523, 902567, 902572, 903523, 903529, 903530, 903531, 903532, 903533, 903534, 903535, 903536, 903538, 903539, 903541, 903542, 903543, 903544, 903545, 903547, 903548, 903550, 903551, 903554, 903556.
	260043 Crankshaft Used on type Nos. 902142, 902159, 902810, 902821, 902822, 902823, 902824, 902825, 902826, 902827, 902828, 902831, 902833, 902835, 902836, 902840, 902841, 902843, 902844, 902848, 902849, 902851, 902854, 902855, 902857, 902858, 902859, 902861, 902863, 902865, 903810, 903813.
	260048 Crankshaft Used on type Nos. 902011, 902012, 902027, 902033, 902034, 902036, 902037, 902040, 902043, 902050, 902051, 902054, 902057, 902059, 902060, 902062, 902064, 902066, 902067, 902069, 902071, 902073, 902075, 902080, 902081, 902084, 902086, 902087, 902088, 902093, 902095, 902098, 902099, 902101, 902102, 902103, 902104, 902105, 902107, 902108, 902110, 902113, 902114, 902116, 902117, 902118, 902126, 902127, 902136, 902139, 902140, 902141, 902144, 902145, 902146, 902147, 902149, 902151, 902154, 902155, 902157, 902158, 902160, 902162, 902163, 902166, 902167, 902168, 902170, 902171, 902172, 903011, 903024.
	260100 Crankshaft Used on type Nos. 902811, 902812, 902829, 902830, 902832, 902834, 902837, 902838, 902839, 902842, 902845, 902846, 902847, 902850, 902852, 902853, 902856, 902860, 902862, 902864, 902866, 903811.
	260101 Crankshaft Used on type No. 903022.
	260103 Crankshaft Used on type Nos. 902511, 902512, 902553, 902584, 902586, 902589, 903511, 903512.
	260116 Crankshaft Used on type Nos. 902524, 902539, 902544, 902554, 902561, 902582, 902590, 903524, 903557.
	260118 Crankshaft Used on type Nos. 902526, 903526, 903537, 903552, 903559.
	260119 Crankshaft Used on type Nos. 902022, 902031, 902055, 902089.
	260180 Crankshaft Used on type Nos. 903546, 903555.
	260196 Crankshaft Used on type No. 902565.
	260229 Crankshaft Used on type No. 903023.
	260242 Crankshaft Used on type No. 902052.
	260248 Crankshaft Used on type No. 902152.
	260265 Crankshaft Used on type No. 903553.
	260266 Crankshaft Used on type Nos. 902021, 902085.
	260271 Crankshaft Used on type Nos. 902077, 902115.
	260272 Crankshaft Used on type Nos. 902100, 902120.
	260366 Crankshaft Used on type No. 903558.
	260493 Crankshaft Used on type Nos. 902522, 902529, 902548, 902549, 902555, 902560, 902566, 902576, 902581, 902587, 903522.
	260494 Crankshaft Used on type Nos. 902525, 902574, 902575, 902580, 902583, 902595, 903525.
	260495 Crankshaft Used on type No. 902573.
	260496 Crankshaft Used on type Nos. 902531, 902571.
260076	Link – Throttle
260178	Spring – Governor Link
260230	Spring – Clutch
260262	Ratchet – Rewind Starter
Note:	**295031** Ratchet – Rewind Starter Used on type Nos. 902057, 902067, 902075, 902077, 902087, 902088, 902093, 902103, 902115, 902590, 902839, 902842.
260546	Spring – Mechanical Governor
290062	Control – Throttle
Note:	**290463** Control – Throttle Used on type Nos. 902578, 902826.
290465	Pump Assembly – Fuel

PART NO.	DESCRIPTION
Note:	**293611** Pump Assembly – Fuel Used on type No. 903553. Uses: **92780** Elbow (between pump and shut-off valve) **92784** Nipple (between pump and shut-off valve) **92953** Elbow (at top of shut-off valve) **93010** Elbow (at top of fuel pump and bottom of shut-off valve) **292370** Valve – Fuel Shut-off **293059** Cap Assembly – Elbow
290568	Lever Assembly – Control
290584	Base – Control Lever
290622	Diaphragm – Fuel Pump
290623	Valve – Fuel Pump
290642	Lever – Control
290779	Case Assembly – Gear
290802	Shaft Assembly – Drive
Note:	**293272** Shaft Assembly – Drive Used on type Nos. 902822, 902840, 902842. **293582** Shaft Assembly – Drive Used on type No. 902856. Order – Shaft Assembly – Drive. Used on type No. 902830 – from the equipment manufacturer.
291044	Lever Assembly – Thermostat
291617	Armature – Magneto
291691	Carburetor Overhaul Kit
291730	Cover Assembly – Gear Case
291925	Pin Assembly – Piston – Standard
291926	Pin Assembly – Piston – .005" O.S.
292037	Cover and Filter – Air Cleaner
292149	Cable – Ignition
Note:	**293141** Cable – Ignition Used on type Nos. 902128, 902571, 903539, 903553, 903558. **294321** Cable – Ignition Used on type Nos. 902021, 902085. **294519** Cable – Ignition Used on type Nos. 902081, 902126. **294577** Cable – Ignition Used on type Nos. 902136, 902154, 902561, 902563, 902566, 902567, 902568, 902569, 902572, 902577, 902848, 902856, 902863, 903024, 903527, 903530, 903531, 903532, 903533, 903535, 903537, 903538, 903541, 903542, 903543, 903544, 903545, 903546, 903547, 903548, 903551, 903552, 903554, 903555.
292681	Valve Assembly – Carburetor Idle
292797	Outlet – Fuel Tank (includes strainer)
292944	Tank Assembly – Fuel (2 qt.)
Note:	**291488** Tank Assembly – Fuel (6 qt.) Used on type No. 902153. Mounting parts for this tank are furnished by the equipment manufacturer.

†Included in Carburetor Overhaul Kit – Part No. 291691.

PART NO.	DESCRIPTION
	292415 Tank Assembly – Fuel (8 qt.) Used on type No. 902080. Mounting parts for this tank are furnished by the equipment manufacturer. **292945** Tank Assembly – Fuel (3 qt.) Used on type Nos. 902026, 902045, 902059, 902078, 902091, 902534, 902536, 902561, 902565, 902567, 902568, 902571, 902572, 902577, 902837, 902855, 903530, 903531, 903533, 903535, 903537, 903538, 903542, 903543, 903544, 903545, 903538, 903550, 903552, 903554. **294692** Tank Assembly – Fuel (3 qt. – large filler) Used on type No. 903553. Uses: **293007** Strainer – Fuel
293400	Piston Assembly – Standard
293401	Piston Assembly – .010" O.S.
293402	Piston Assembly – .020" O.S.
293403	Piston Assembly – .030" O.S.
293412	Body Assembly – Upper Carburetor (Use Part No. 294312)
293477	Float – Carburetor
†**293478**	Valve and Seat – Fuel Inlet
293506	Ring Set – Standard Piston
293507	Ring Set – .010" O.S. Piston
293508	Ring Set – .020" O.S. Piston
293509	Ring Set – .030" O.S. Piston
293515	Body Assembly – Carburetor
Note:	**294431** Body Assembly – Lower Used on type Nos. 903558, 903559. Includes: **90051** Screw **90362** Washer – Lock **294608** Body Assembly – Lower Carburetor Used on type Nos. 903022, 903535, 903536, 903542, 903545, 903551, 903553.
293517	Cleaner Assembly – Air (Use with Stud Nos. 230238 and 230361)
Note:	**294703** Cleaner – Air Used on type Nos. 903539, 903558. Uses: **230408** Spacer – Air Cleaner
293525	Gasket Set
293672	Pipe – Fuel
Note:	**89663** Pipe – Fuel – 11½" Long Used on type No. 902827. **291128** Pipe – Fuel – 13¼" Long Used on type No. 902821. **293203** Pipe – Fuel – 14½" Long Used on type 902142. **294323** Pipe – Fuel Used on type Nos. 902026, 902059, 902078, 902534, 902536, 902565, 902572, 903533, 903554. **294393** Pipe – Fuel Used on type Nos. 902032, 902033, 902035, 902058, 902060, 902061, 902062, 902066, 902083, 902103,

PART NO.	DESCRIPTION
	902110, 902126, 902148, 902167, 902841, 903023. The following fuel pipes and fittings are used on type Nos. 902106, 902169, 902546, 902549, 902551, 902552, 902555, 902574, 902587, 902857: **294530** Pipe – Fuel (short) **294531** Pipe – Fuel (long) **292486** Wing Plug, Chain and Clip Assembly **99511** Tee **92713** Coupling **294553** Pipe – Fuel Used on type Nos. 903535, 903536, 903551. **294604** Pipe – Fuel Used on type Nos. 902143, 902561, 902579, 902854. **294754** Pipe – Fuel Used on type No. 903022. **294823** Pipe – Fuel Used on type No. 903542. **295050** Pipe – Fuel (Flexible) Used on type Nos. 902046, 902048, 902053, 902054, 902081, 902088, 902092, 902093, 902107, 902111, 902114, 902154, 902577, 902859, 903530, 903537, 903538, 903544, 903545. Uses: **230317** Connector (at tank valve) **230318** Connector (at carburetor) **295144** Pipe – Fuel – 14½" Long Used on type No. 903553.
293708	Bushing – Cylinder
Note:	Requires special tools for installation.
293740	Seal – Oil
293907	Shaft and Lever – Throttle
Note:	**99868** Shaft and Lever – Throttle Used on type Nos. 903010, 903011, 903021, 903022, 903023, 903024, 903510, 903511, 903512, 903521, 903522, 903523, 903524, 903525, 903526, 903527, 903530, 903531, 903532, 903533, 903534, 903535, 903536, 903537, 903538, 903539, 903540, 903541, 903542, 903543, 903544, 903545, 903546, 903548, 903550, 903551, 903552, 903553, 903554, 903555, 903556, 903557, 903558, 903559, 903810, 903811.
293934	Valve Assembly – Fuel Shut-off
293959	Starter Pulley with Screen
293991	Bowl – Air Cleaner
294064	Ring Set – .040" O.S. Piston
294065	Piston Assembly – .040" O.S.
294077	Lever Assembly – Governor
294088	Pulley – Rewind Starter
294178	Breather – Valve Chamber
294207	Oil Seal and Spacer
294237	Motor – Electric Starting

PART NO.	DESCRIPTION
294240	Clutch Assembly – Electric Starter
294243	Chain – Electric Starter Drive
294245	Screen – Electric Starter Rotating
294260	Housing – Blower (Rewind Starter)
Note:	**294338** Housing – Blower (Rewind Starter) Used on type Nos. 902075, 902101, 902108, 902113, 902118, 902147, 902151, 902158, 902862. **294639** Housing – Blower (Rewind Starter) Used on type No. 903537.
294263	Housing – Blower (Rope Starter)
Note:	**220870** Housing – Blower Used on type Nos. 903022, 903530, 903535, 903536, 903538, 903542, 903545, 903548, 903551, 903553, 903554, 903555, 903556.
294264	Clutch Assembly – Rewind Starter
Note:	**294470** Clutch Assembly – Rewind Starter Used on type Nos. 902057, 902067, 902075, 902077, 902087, 902088, 902093, 902103, 902115, 902590, 902839, 902842. Includes: **66688** Washer – Ratchet Sealing
294291	Housing – Blower (Electric Starter)
294300	Rod Assembly – Connecting
294301	Cylinder Assembly
Note:	**294753** Cylinder Assembly Used on type No. 903022. **295086** Cylinder Assembly Used on type Nos. 902146, 902154, 902586, 902596, 903559. **295137** Cylinder Assembly Used on type Nos. 903553, 903558.
294303	Spring – Rewind Starter
294305	Cover Assembly – Crankcase (Used on Model 6B)
294306	Cover Assembly – Crankcase (Used on Model 6B-FB)
294307	Cover Assembly – Crankcase (Used on Model 6B with Mechanical Governor)
294308	Cover Assembly – Crankcase (Used on Models 6B-F and 6B-R6)
294311	Carburetor Assembly
Note:	**294075** Carburetor Assembly (Mechanical Governor) Used on type Nos. 903010, 903011, 903021, 903023, 903024, 903510, 903511, 903512, 903521, 903522, 903523, 903524, 903525, 903526, 903527, 903530, 903531, 903532, 903533, 903534, 903537, 903538, 903540, 903541, 903543, 903544, 903546, 903548, 903550, 903552, 903554, 903555, 903556, 903557, 903810, 903811. **294089** Carburetor Assembly (Mechanical Governor – Kerosene-Gasoline) Used on type No. 903539. **294607** Carburetor Assembly (Automatic Choke) Used on type Nos. 903022, 903535, 903536, 903542, 903545, 903551. **294671** Carburetor Assembly (Kerosene-Gasoline) Used on type Nos. 902106, 902169, 902546, 902549, 902551, 902552, 902555, 902574, 902587, 902857. **295286** Carburetor Assembly (Kerosene-Gasoline-Remote Choke) Used on type No. 903559. **295287** Carburetor Assembly (Mech. Governor – Fuel Pump – Remote Choke) Used on type No. 903558. **295371** Carburetor Assembly (Mech. Governor – Automatic Choke – Fuel Pump) Used on type No. 903553. **295613** Carburetor Assembly (L-P Gas) Used on type No. 902595.
294312	Housing Assembly – Throttle
Note:	**89495** Housing Assembly – Throttle Used on type Nos. 903010, 903011, 903021, 903022, 903023, 903024, 903510, 903511, 903512, 903521, 903522, 903523, 903524, 903525, 903526, 903527, 903530, 903531, 903532, 903533, 903534, 903535, 903536, 903537, 903538, 903539, 903540, 903541, 903542, 903543, 903544, 903545, 903546, 903548, 903550, 903551, 903552, 903553, 903554, 903555, 903556, 903557, 903558, 903559, 903810, 903811.
294342	Adapter – Shaft
294343	Sprocket – Electric Starter
294491	Thermostat Assembly
294492	Bracket and Tube – Thermostat Assembly
294499	Bushing Assembly – Crankcase Cover
Note:	Requires special tools for installation.
294502	Bracket – Control Wire Casing
294575	Link – Starter Chain Master
294617	Blade – Governor
294628	Breaker Points and Condenser Set
Note:	**293999** Wire – Condenser Ground **92791** Washer – Lock – Shakeproof (2) **90576** Nut – Hex. – 8-32 **90072** Screw – Machine, Rd. Hd. – 8-32 x $\frac{5}{8}$" **66895** Insulator – Terminal Used on type Nos. 902025, 902049, 902068, 902069, 902075, 902084, 902087, 902090, 902107, 902117, 902121, 902134, 902136, 902145, 902540, 902544, 902566, 902848, 902863, 903022, 903527, 903530, 903531, 903535, 903536, 903537, 903541, 903542, 903543, 903547, 903550, 903551, 903552, 903559. **293999** Wire – Condenser Ground **92791** Washer – Lock – Shakeproof (2) **90576** Nut – Hex. – 8-32 **90072** Screw – Machine, Rd. Hd. – 8-32 x $\frac{5}{8}$" **66935** Insulator – Terminal Used on type Nos. 902128, 902571, 903539, 903553, 903558.
294863	Cover and Filter – Air Cleaner (with mounting stud)
Note:	**294864** Cover and Filter – Air Cleaner (with mounting stud) Used on type Nos. 902048, 902067, 902072, 902075, 902076, 902077, 902079, 902095, 902100, 902113, 902114, 902140, 902161, 902163, 902554, 902593, 902595, 902855, 902859, 902861, 902864.
294868	Cleaner Assembly – Air (with mounting stud)
Note:	**294873** Cleaner Assembly – Air (with mounting stud) Used on type Nos. 902048, 902067, 902072, 902075, 902076, 902077, 902079, 902095, 902100, 902113, 902114, 902140, 902161, 902163, 902554, 902593, 902595, 902855, 902859, 902861, 902864.
294874	Shaft and Lever Assembly – Choke
Note:	**23252** Shaft – Choke **99679** Lever and Swivel – Choke Uses: **26228** Spring – Choke Return **92017** Screw (attach control wire) **93347** Screw (to mount lever) Used on type Nos. 903558, 903559. **294489** Shaft, Lever and Vane Assembly – Automatic Choke. Used on type Nos. 903022, 903535, 903536, 903542, 903545, 903551, 903553. Uses: **291040** Lever and Weight Assembly Includes: **90200** Screw
295936	Flywheel – Magneto
Note:	**293205** Flywheel – Magneto Used on type No. 903559.
296688	Governor Housing and Gear Assembly